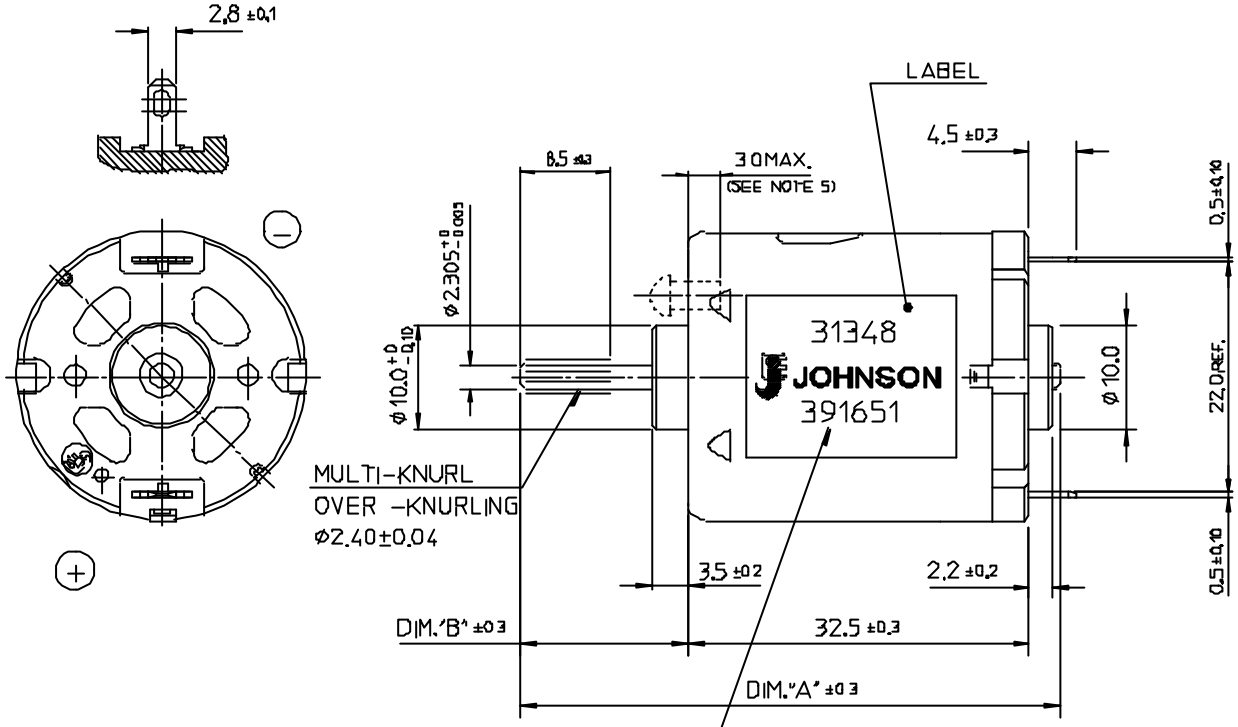

ROTATION

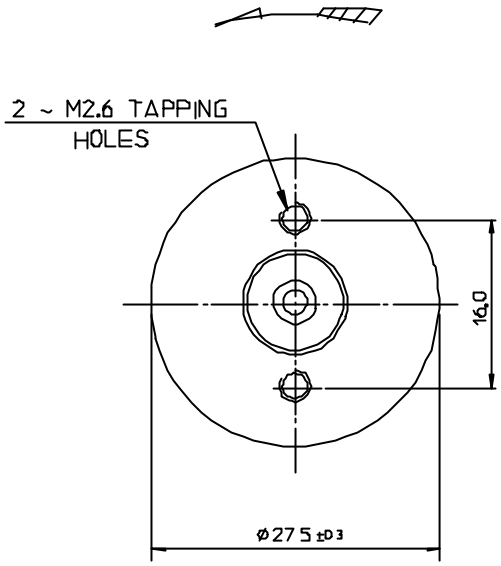

DIRECT STAMP PART NO. & DATE CODE ONTO LABEL. CHARACTERS ARE TO BE BLACK AND NON-REMOVABLE DATE CODE FORMAT –
FIRST DIGIT – STAND FOR LOCATION CODE
e.g. 1 FOR P01 & P12, 3 FOR 301, 8 FOR 801
SECOND DIGIT – STAND FOR PRODUCTION YEAR e.g. 9 FOR 1999
THIRD & FOURTH DIGITS – STAND FOR PRODUCTION WEEK
e.g. 16 FOR 16TH WEEK
FIFTH DIGIT – STAND FOR WEEK DAY
e.g 1 FOR MONDAY, 2 FOR TUESDAY, 3 FOR WEDNESDAY,
4 FOR THURSDAY, 5 FOR FRIDAY, 6 FOR SATURDAY
0 FOR SUNDAY.
LAST DIGIT – STAND FOR LOT NUMBER

NOTES:–

1. LENGTH OF SHAFT, DIM. "A" 52.0 mm.
2. FRONT EXTENSION, DIM. "B" 16.0 mm., MEASURED WITH SHAFT PUSHED AGAINST PLASTIC END CAP.
3. DIRECTION OF ROTATION : ANTI-CLOCKWISE WHEN VIEWING MOTOR OUTPUT END WITH POSITIVE VOLTAGE APPLIED TO POSITIVE TERMINAL.
4. END PLAY : 0.50 mm. MAX.
5. MAX. MALE SCREW LENGTH ENGAGED INTO MOTOR HOUSING TO BE 3.0mm.

ALL DIMENSIONS ARE IN MILLIMETRES DO NOT SCALE DRAWING

ALT.	REF.	DESCRIPTION	BY	DATE
A		FIRST ISSUE	M.L LI	1999/09/30

MATERIAL | FINISH | TOLERANCES: 1 DEC. PLACE ±0.15, 2 DEC. PLACES±, 3 DEC. PLACES±, ANGULAR ± 2° | A3

TITLE: HC 315 G MOTOR OUTLINE

SCALE	2 : 1	DATE
DWN. BY	M.L LI	1999/09/30
CHK. BY		
APP. BY		

JOHNSON ELECTRIC ENGINEERING LTD.
A JOHNSON ELECTRIC GROUP COMPANY,
JOHNSON BUILDING, TAI PO, HONGKONG.

DWG. NO. 31348-99900

JOHNSON ELECTRIC GROUP OF COMPANIES (JOHNSON ELECTRIC)
This document is the Property of Johnson Electric and the information therein contained is confidential. Unauthorised reproduction or other use thereof, whether directly or indirectly, in whole or in part, is prohibited. Copies of this document are available only from Johnson Electric.
© Copyright Johnson Electric S.A. 1999. All rights reserved.

The assembler incorporating this or into an apparatus, has to ensure that the apparatus meets the appropriate local, national, or international standards, directives and specification for EMC. Johnson Electric is prepared to assist the assembler in solving potential EMC problems